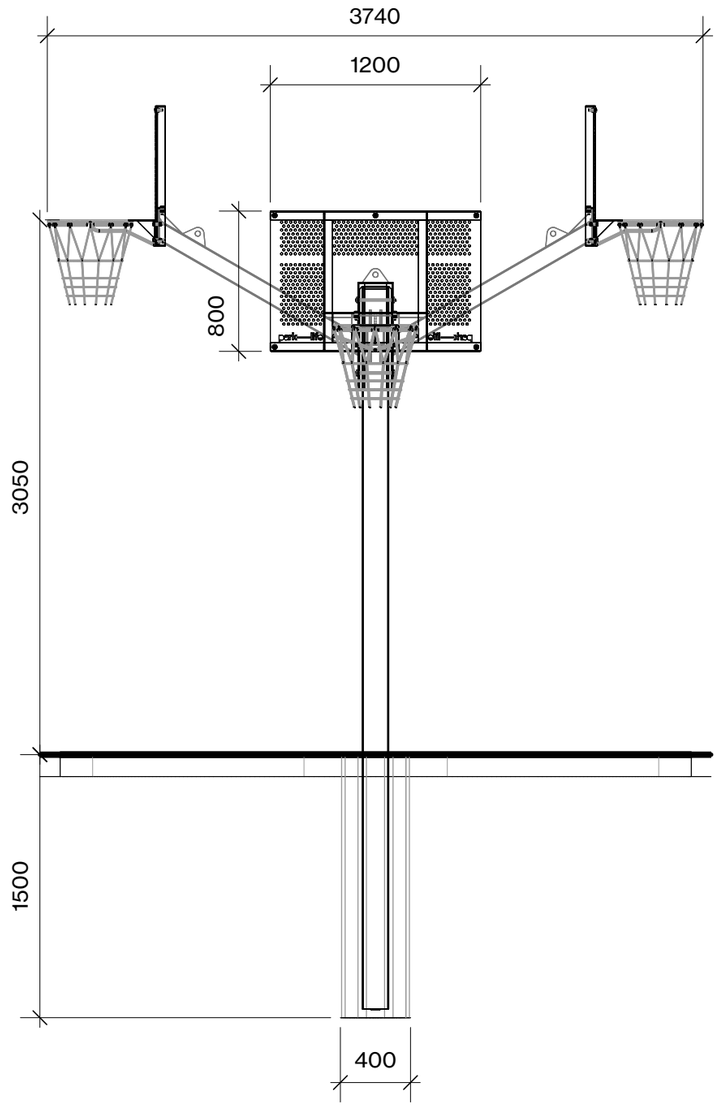

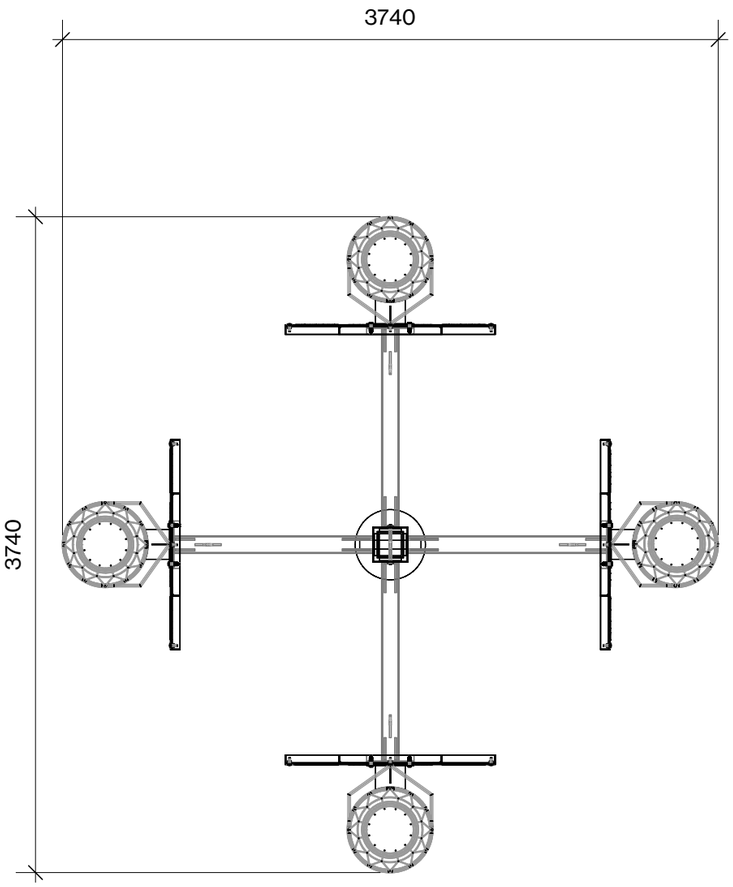

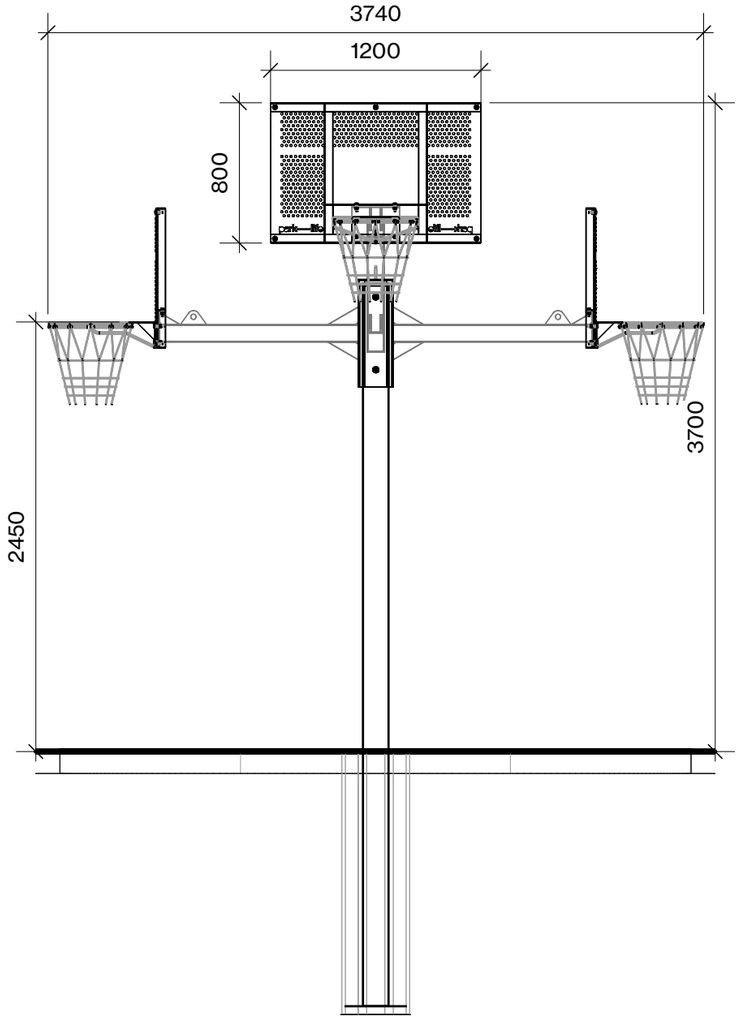

TECHNICAL DRAWING

BB03_ BASKETBALL FOUR WAY TOWER

park—life™

COPYRIGHT THE DESIGN, DRAWINGS, SPECIFICATION AND THE COPYRIGHT THEREIN ARE THE PROPERTY OF PARKLIFE LTD 2020 | **CONTACT** 029 534 8859 INFO@PARKLIFE.CO.NZ PARKLIFE.CO.NZ